THEBAN MAPPING PROJECT

# KV 6 - Rameses IX, Dyn. XX

Plan, sections

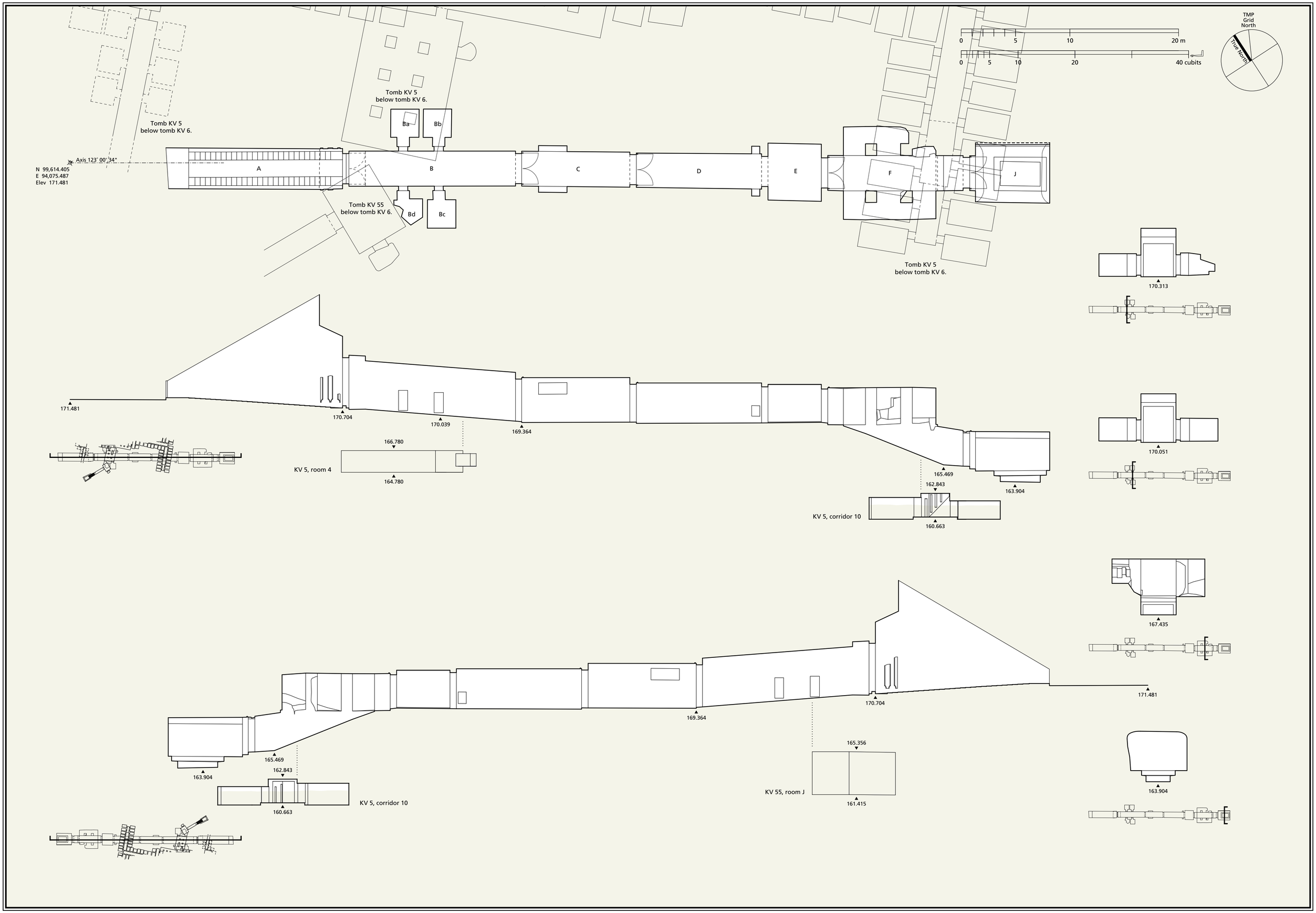


Drawn by Walton Chan.

# KV 6 - Rameses IX, Dyn. XX

Axonometric

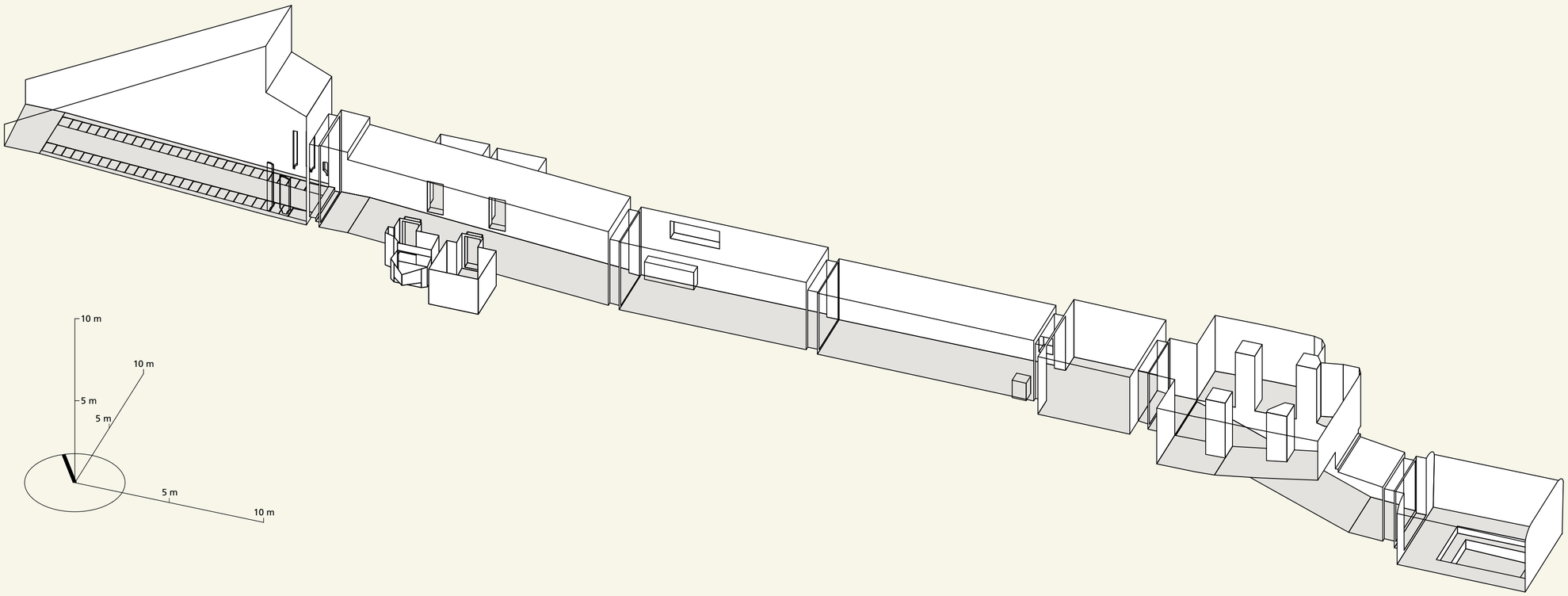


Drawn by Walton Chan.